FORM IV-2
(Obverse)
(6-82)

1) Date: March 21, 19 83
2) Operator's Well No. Treeline #1
3) API Well No. 47 039 3962
State County Permit

DRILLING CONTRACTOR:

STATE OF WEST VIRGINIA
DEPARTMENT OF MINES, OIL AND GAS DIVISION

OIL AND GAS WELL PERMIT APPLICATION

4) WELL TYPE: A Oil ____ / Gas X /
B (If "Gas", Production X / Underground storage ____ / Deep ____ / Shallow X /)

5) LOCATION: Elevation: 791 Watershed: Elk River
District: Elk County: Kanawha Quadrangle: Big Chimney

6) WELL OPERATOR D. C. Malcolm, Inc.
Address 1006 Commerce Square
Charleston, WV 25301

7) OIL & GAS ROYALTY OWNER Treeline Corporation
Address Box 18 Reynolds Ave.
Elkview, WV 25071
Acreage 21

8) SURFACE OWNER Treeline Corporation
Address SAME
Acreage 21

9) FIELD SALE (IF MADE) TO:
Address

10) OIL & GAS INSPECTOR TO BE NOTIFIED
Name Homer H. Dougherty
Address Linden Rt. Box 3-A
Looneyville, WV 25259

11) DESIGNATED AGENT D. C. Malcolm
Address 1006 Commerce Square
Charleston, WV 25301

12) COAL OPERATOR Not operated
Address

13) COAL OWNER(S) WITH DECLARATION ON RECORD:
Name Treeline Corporation
Address SAME
Name
Address

14) COAL LESSEE WITH DECLARATION ON RECORD:
Name
Address

RECEIVED
MAY 5 - 1983
OIL & GAS DIVISION
DEPT. OF MINES

15) PROPOSED WORK: Drill X / Drill deeper ____ / Redrill ____ / Fracture or stimulate MAY 5 - 1983
Plug off old formation ____ / Perforate new formation ____ /
Other physical change in well (specify) ____

16) GEOLOGICAL TARGET FORMATION, Devonian SHale
17) Estimated depth of completed well, 4000 feet
18) Approximate water strata depths: Fresh, 190 feet; salt, 900 feet.
19) Approximate coal seam depths: ____ Is coal being mined in the area? Yes ____ / No X /

20) CASING AND TUBING PROGRAM

CASING OR TUBING TYPE	SPECIFICATIONS Size	Grade	Weight per ft.	New	Used	FOOTAGE INTERVALS For drilling	Left in well	CEMENT FILL-UP OR SACKS (Cubic feet)	PACKERS
Conductor									Kinds
Fresh water	9 5/8"			X		300	300	surf.	NEAT
Coal									Sizes
Intermediate	7"		20#	X		1800	1800	300'	
Production	4 1/2"		10.5	X		4000	4000	2000'	Depths set OR GAS REG by Rule 15.01
Tubing									
Liners									Perforations: Top Bottom

21) EXTRACTION RIGHTS
Check and provide one of the following:
☐ Included is the lease or leases or other continuing contract or contracts by which I hold the right to extract oil or gas.
☐ The requirement of Code 22-4-1-(c) (1) through (4). (See reverse side for specifics.)

22) ROYALTY PROVISIONS
Is the right to extract, produce or market the oil or gas based upon a lease or other continuing contract or contracts providing for flat well royalty or any similar provision for compensation to the owner of the oil or gas in place which is not inherently related to the volume of oil or gas so extracted, produced or marketed? Yes ☐ No ☐
If the answer above is No, nothing additional is needed. If the answer is Yes, you may use Affidavit Form IV-60.

23) Required Copies (See reverse side.)

24) Copies of this Permit Application and the enclosed plat and reclamation plan have been mailed by registered mail or delivered by hand to the above named coal operator, coal owner(s), and coal lessee on or before the day of the mailing or delivery of this Permit Application to the Department of Mines at Charleston, West Virginia.

Notary: Mary M. Crawford
My Commission Expires 2-9-92

Signed: D. C. Malcolm
Its: President

OFFICE USE ONLY

DRILLING PERMIT

Permit number 47-039-3962

Date May 20 19 83

02/16/2024

This permit covering the well operator and well location shown below is evidence of permission granted to drill in accordance with the pertinent legal requirements subject to the conditions contained herein and on the reverse hereof. **Notification must be given to the District Oil and Gas Inspector. (Refer to No. 10) Prior to the construction of roads, locations and pits for any permitted work.** In addition, the well operator or his contractor shall notify the proper district oil and gas inspector 24 hours before actual permitted work has commenced.)

Permit expires January 20, 1984 unless drilling is commenced prior to that date and prosecuted with due diligence.

Bond:	Agent:	Plat:	Casing	Fee
BB	✓			5777

Administrator, Office of Oil and Gas

NOTE: Keep one copy of this permit posted at the drilling location.

File

Line Item Explanation

1) Date of Application

2) Your well name and number

3) To be filled out by office of oil & gas

4A) "Oil" means natural crude oil or petroleum and other hydrocarbons, regardless of gravity, which are produced at the well in liquid form by ordinary production methods and which are not the result of condensation of gas after it leaves underground reservoirs: "Gas" means all natural gas and all other fluid hydrocarbons not defined as oil.

4B) "Shallow well" means any well drilled and completed in a formation above the top of the uppermost member of the "Onondaga Group" or a depth less than six thousand feet, whichever is shallower.

"Deep well" means any well drilled and completed in a formation at or below the top of the uppermost member of the "Onondaga Group" or at a depth less then six thousand feet, whatever is shallower.

5) Where well is located

6) Before a permit can be issued in a corporation, company partnership, or fictitious name, the name must be registered with the Secretary of State Office

7) Use separate sheet if necessary

8) Present surface owner at time application is filed.

9) Optional

11) See Reg. 7.01 relating to code §22-4-1k

12) "Coal Operator" means any persons, firm, partnership, partnership association or corporation that proposes to or does operate a coal mine. See Note 24

13 & 14) As per §22-4-20; See Note 24

15) Work that will be attempted—A separate Form IV-2 shall not be required for fracturing or stimulating a well where fracturing or stimulating is to be part of the work for which a permit is sought and is noted as such on the Form IV-2 filed in connection therewith.

16) Anticipated formation for which well will be completed

17) Self explanatory

18) Depth to deepest freshwater, and shallowest salt water, taken from nearby wells corrected for differences in elevation

19) All coal seam depths

20) Proposed casing program and cementing refer to Code 22-4-5, 22-4-6, 22-4-7, 22-4-8, 22-4-8a Reg 9.01, 15.01, 15.02, 15.03, 15.04, 25.01, 25.02, 25.03, 25.04

21) Code 22-4-11(c) - In lieu of filing the lease or leases or other continuing contract or contracts, the applicant for a permit described herein may file the following:
(1)A brief description of the tract of land including the district and county wherein the tract is located;
(2)The identification of all parties to all leases or other continuing contractual agreements by which the right to extract, produce or market the oil or gas is claimed;
(3)The book and page number wherein each such lease or contract by which the right to extract, produce or market the oil or gas is recorded;
(4)A brief description of the royalty provisions of each such lease or contract.

22) Code 22-4-11(d) and 22-4-1l(e).

23) Regulation 7.02 of the Department of Mines provides that the original and four copies of Form IV-2 must be filed with the Department, accompanied by (i) a plat in the form prescribed by Regulation 11, (ii) a bond in one of the forms prescribed by Regulation 12, or in lieu thereof the other security allowed by Code §22-4-2, (iii) Form IV-9, "Reclamation Plan", applicable to the reclamation required by Code §22-4-12b and Regulation 23, (iv) unless previously paid on the same well, the fee required by Code §22-4-12a, and (v) if applicable, the consent required by Code §22-4-8a from the owner of any water well or dwelling within 200 feet of the proposed well.

24) **The above named coal operator, coal owner(s), and coal lessee are hereby notified that any objection they wish to make or are required to make by Code §22-4-3 must be filed with the Department of Mines within fifteen (15) days after the receipt of this Application by the Department.**

.....

The following waiver must be completed by the coal operator and by any coal owner or coal lessee who has recorded a declaration under Code 22-4-20, if the permit is to be issued within fifteen (15) days of receipt thereof.

WAIVER

02/16/2024

The undersigned coal operator_____/ owner_____/ lessee_____/of the coal under this well location has examined this proposed well location. If a mine map exists which covers the area of the well location, the well location has been added to the mine map. The undersigned has no objection to the work proposed to be done at this location, provided, the well operator has complied with all applicable requirements of the West Virginia Code and the governing regulations.

Date: _____, 19_____ By _____

Its _____

FORM IV-2(B)
(Obverse)
7-83

FILE COPY

RECEIVED
FEB 23 1984
OIL & GAS DIVISION
DEPT. OF MINES

1) Date: January 11, 19 84
2) Operator's Well No. Treeline #1
3) API Well No. 47 - 039 - 3962-REN
State County Permit

STATE OF WEST VIRGINIA
DEPARTMENT OF MINES, OIL AND GAS DIVISION
APPLICATION FOR A WELL WORK PERMIT

4) WELL TYPE: A Oil ____ / Gas X /
B (If "Gas", Production X / Underground storage ____ / Deep ____ / Shallow X /)

5) LOCATION: Elevation: 791' Watershed: Elk River
District: Elk County: Kanawha Quadrangle: Big Sandy

6) WELL OPERATOR D. C. Malcolm, Inc.
Address 1006 Commerce Square
Charleston, WV 25301

7) DESIGNATED AGENT D. C. Malcolm
Address 1006 Commerce Square
Charleston, WV 25301

8) OIL & GAS INSPECTOR TO BE NOTIFIED
Name Jerry Holcomb
Address Box 58
Indore, WV 25111

9) DRILLING CONTRACTOR:
Name Unknown
Address ____

10) PROPOSED WELL WORK: Drill X / Drill deeper ____ / Redrill ____ / Stimulate X /
Plug off old formation ____ / Perforate new formation ____ /
Other physical change in well (specify) ____

11) GEOLOGICAL TARGET FORMATION, Devonian Shale

12) Estimated depth of completed well, 4000 feet

13) Approximate trata depths: Fresh, 190 feet; salt, 900 feet.

14) Approximate coal seam depths: ____ Is coal being mined in the area? Yes ____ No X /

15) CASING AND TUBING PROGRAM

CASING OR TUBING TYPE	SPECIFICATIONS Size	Grade	Weight per ft.	New	Used	FOOTAGE INTERVALS For drilling	Left in well	CEMENT FILL-UP OR SACKS (Cubic feet)	PACKERS
Conductor									Kinds
Fresh water	9-5/8			X		300'	300'	to surface	NEAT
Coal									Sizes
Intermediate	7"		20#	X		1800'	1800'	300'	
Production	4½"		10.5	X		4000'	4000'	2000'	Depths set or as req.
Tubing									by rule 15.01
Liners									Perforations:
									Top Bottom

RECEIVED
FEB 23 1984
OIL & GAS DIVISION
DEPT. OF MINES

OFFICE USE ONLY
DRILLING PERMIT

Permit number 47-039-3962-REN February 29, 19 84
Date

This permit covering the well operator and well location shown below is evidence of permission granted to drill in accordance with the pertinent legal requirements subject to the conditions contained herein and on the reverse hereof. **Notification must be given to the District Oil and Gas Inspector, (Refer to No. 8) Prior to the construction of roads, locations and pits for any permitted work.** In addition, the well operator or his contractor shall notify the proper district oil and gas inspector 24 hours before actual permitted work has commenced.)

The permitted work is as described in the Notice and Application, plat, and reclamation plan, subject to any modifications and conditions specified on the reverse hereof.

Permit expires March 1, 1986 unless well work is commenced prior to that date and prosecuted with due diligence.

Bond:	Agent: ✓	Plat:	Casing	Fee
BB	MH	MH	MH	386

Margaret T. Hasse
Administrator, Office of Oil and Gas

NOTE: Keep one copy of this permit posted at the drilling location.

File

See the reverse side of the APPLICANT'S COPY for instructions to the well operator.

____ lbs/acre ____ lbs/acre

*Inoculate all legumes such as vetch, trefoil and clovers with the proper bacterium. Inoculate with 3X recommended amount.

PLAN PREPARED BY D. C. Malcolm 02/16/2024
ADDRESS 1006 Commerce Square
Charleston, WV 25301
PHONE NO. (304) 343-9593

NOTES: Please request landowner's cooperation to protect new seedling for one growing season. Attach separate sheets as necessary for comments.

(REV 8-81)

ATTACH OR PHOTOCOPY SECTION OF
INVOLVED TOPOGRAPHIC MAP.
QUADRANGLE Big Chimney

LEGEND

Well Site ⊕

Access Road ———

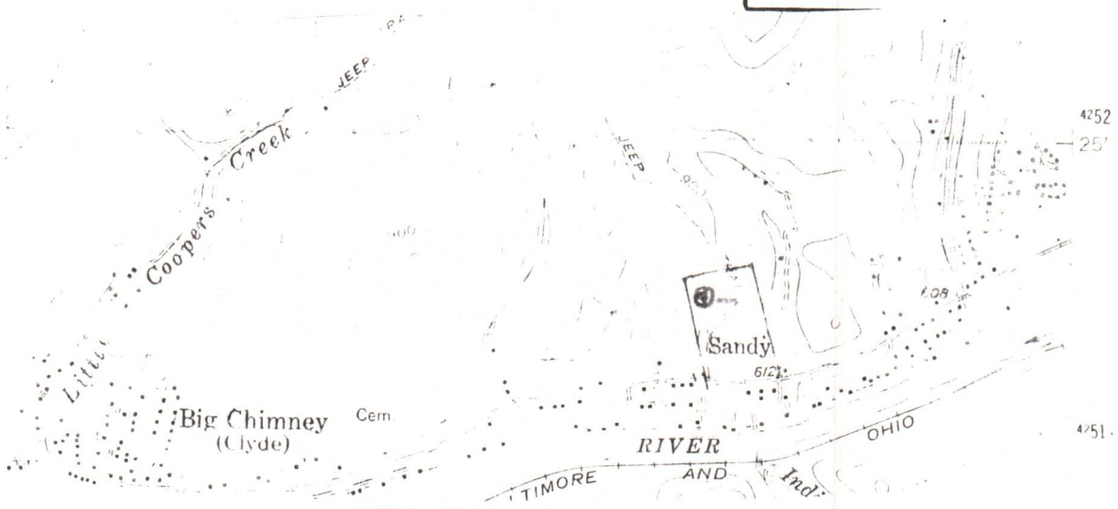

WELL SITE PLAN

Sketch to include well location, existing access road, roads to be constructed, wellsite, drilling pits and necessary structures numbered or lettered to correspond with the first part of this plan. Include all natural drainage.

LEGEND

Property boundary

Road

Existing fence

Planned fence

Stream

Open ditch

Diversion

Spring

Wet spot

Building

Drain pipe

Waterway

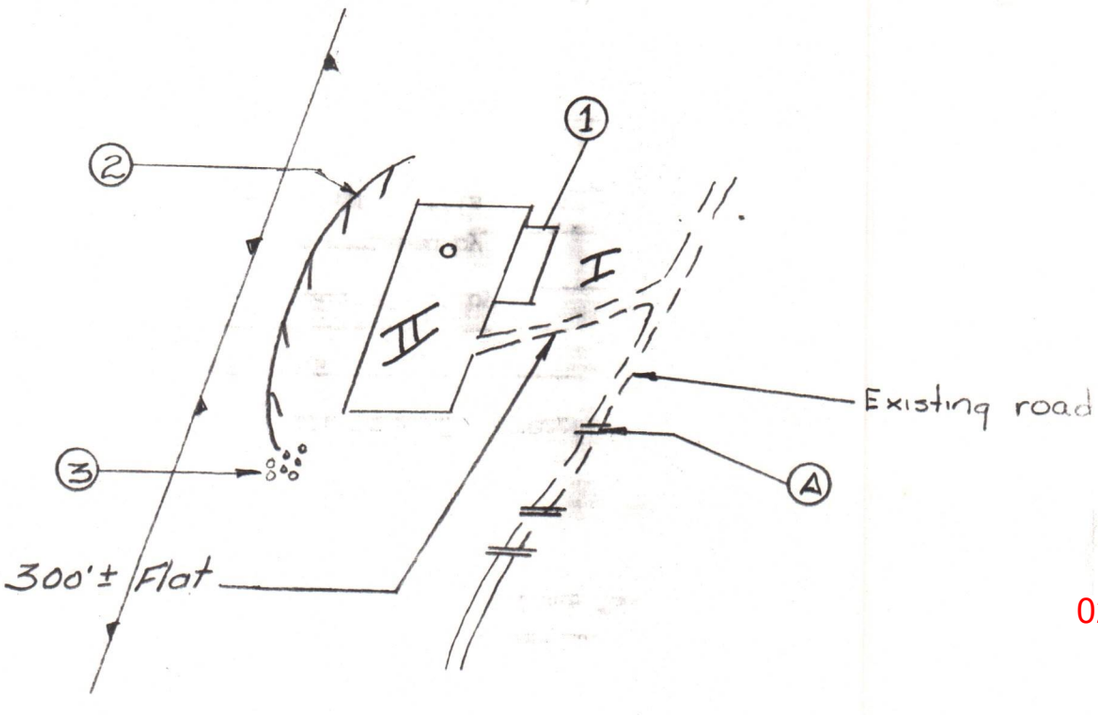

02/16/2024

FORM IV-2(A)

1) Date: January 11, 1984
2) Operator's
Well No. Treeline #1
3) API Well No. 47 - 039 - 3962-REN
State County Permit

STATE OF WEST VIRGINIA
DEPARTMENT OF MINES, OFFICE OF OIL & GAS

NOTICE OF APPLICATION FOR A WELL WORK PERMIT

4) SURFACE OWNER(S) OF RECORD TO BE SERVED

(i) Name Treeline Corporation
Address Box 18, Reynolds Ave.
Elkview, WV 25071

(ii) Name
Address

(iii) Name
Address

5(i) COAL OPERATOR None
Address

5(ii) COAL OWNER(S) WITH DECLARATION ON RECORD:
Name Treeline Corporation
Address Box 18, Reynolds Ave.
Elkview, WV 25071
Name
Address

5(iii) COAL LESSEE WITH DECLARATION ON RECORD:
Name
Address

TO THE PERSON(S) NAMED ABOVE: You should have received this Form and the following documents:

(1) The Application for a Well Work Permit on Form IV-2(B) (or Form IV-4 if the well is to be plugged, which sets out the parties involved in the drilling or other work, and describes the well and its location and, if applicable, the proposed casing and cementing program;
(2) The plat (surveyor's map) showing the well location on Form IV-6; and
(3) The Construction and Reclamation Plan on Form IV-9)unless the well work is only to plug a well), which sets out the plan for erosion and sediment control and for reclamation for the site and access road.

THE REASON YOU RECEIVED THESE DOCUMENTS IS THAT YOU HAVE RIGHTS REGARDING THE APPLICATION WHICH ARE SUMMARIZED IN THE "INSTRUCTIONS" ON THE REVERSE SIDE OF THE COPY OF THE APPLICATION (FORM IV-2(B) OR FORM 4, DESIGNATED FOR YOU. HOWEVER, YOU ARE NOT REQUIRED TO TAKE ANY ACTION AT ALL.

Take notice that under Chapter 22 of the West Virginia Code, the undersigned well operator proposes to file or has filed this Notice and Application and accompanying documents for a Well Work Permit with the Administrator of the Office of Oil and Gas, West Virginia Department of Mines, with respect to a well at the location described on attached Application and depicted on attached Form IV-6. Copies of this Notice, the Application, the plat, and the Construction and Reclamation Plan have been mailed by registered or certified mail or delivered by hand to the person(s) named above (or by publication in certain circumstances) on or before the day of mailing or delivery to the Administrator.

6) EXTRACTION RIGHTS

Check and provide one of the following:
☒ Included is the lease or leases or other continuing contract or contracts by which I hold the right to extract oil or gas.
☐ The requirement of Code 22-4-1-(c)(1) through (4). (See reverse side for specifics.)

7) ROYALTY PROVISIONS
Is the right to extract, produce or market the oil or gas based upon a lease or leases or other contract or contracts providing for flat well royalty or any similar provision for compensation to the owner of the oil or gas in place which is not inherently related to the volume of oil or gas so extracted, produced or marketed? Yes No

If the answer above is No, nothing additional is needed. If the answer is Yes, you may use Affidavit Form IV-60.

See the reverse side for line item instructions, and for instructions concerning the required copies of the Notice and Application, plat, and Construction and Reclamation Plan.

RECEIVED FEB 23 1984 OIL & GAS DIVISION DEPT. OF MINES

RECEIVED FEB 23 1984 OIL & GAS DIVISION DEPT. OF MINES

The truth of the information on the Notice and Application is verified and sworn to and the Notice is signed on behalf of the Well Operator in my County and State by D. C. Malcolm, this 12 day of January, 1984.
My commission expires 9/21, 1992.

Cathy L Hanford
Notary Public, Kanawha County,
State of West Virginia

WELL OPERATOR D. C. Malcolm, Inc.
By D C Malcolm
Its President
Address 1006 Commerce Square
Charleston, WV 25301
Telephone (304) 343-9593

02/16/2024

Form IV-2 (A)
Reverse

INSTRUCTIONS TO APPLICANT

CONCERNING THE LINE ITEMS:

1) Date of Notice.

2) Your well name and number.

3) To be filled out by the Office of Oil & Gas.

4) & 5) Use separate sheet if necessary.

4) Surface owner(s) of record to be served with Notice and Application. However, see also Code § 22-4-1b(b) if "more than three tenants in common or other co-owners of interest described in subsection (a) of this section hold interests in such lands".

5(i) "Coal Operator" means any person, firm, partnership, partnership association or corporation that proposes to or does operate a coal mine.

5(ii, iii) See Code § 22-4-20.

6) See Code § 22-4-11(c). However, in lieu of filing the lease(s) or other continuing contract(s), the Applicant may fill out the information in the space provided below.

7) See Code § § 22-4-11(d, e).

CONCERNING THE REQUIRED COPIES FOR FILING AND SERVICE:

Filing. Code § 22-4-1k and Regulation 7.02 provide that the original and required copies of the Notice and Application must be filed with the Administrator, accompanied by (i) a plat in the form prescribed by Regulation 11, (ii) a bond in one of the forms prescribed by Regulation 12, or in lieu thereof the other security allowed by Code § 22-4-1k(d) and the reclamation required by Code § 22-4-12b and Regulation 23, (iv) unless previously paid on the same well, the fees required by Code § 22-4-1a(c) and 22-3-12a, and (v) if applicable, the consent required by Code § 22-4-8a from the owner of any water well on dwelling within 200 feet of the proposed well.

Service. In addition, service must be made on the surface owner(s) and the person(s) with an interest in the coal. See Code § § 22-4-1m, 22-4-2, 22-4-2a, and 22-4-2b.

INFORMATION SUPPLIED UNDER CODE § 22-4-11(d)
IN LIEU OF FILING LEASE(S) AND OTHER CONTINUING CONTRACT(S)

Under the oath required to make the verification on the obverse side of this Notice, I depose and say that I am the person who signed the Notice for the Applicant, and that--

(1) the tract of land is the same tract described in the Application to which this Notice applies, partly or wholly depicted in the accompanying plat, and described in the Construction and Reclamation Plan;

(2) the parties and recordation data (if recorded) for lease(s) or other continuing contract(s) by which the Applicant claims the right to extract, produce or market the oil or gas are as follows:

Grantor, lessor, etc.	Grantee, lessee, etc.	Royalty	Book	Page

02/16/2024

FORM IV-2(B)
(Obverse)
7-83

SURFACE OWNER'S COPY

1) Date: January 11, 19[illegible]
2) Operator's Well No. Treeline #1
3) API Well No. 47 [illegible] 039
State County Permit

STATE OF WEST VIRGINIA
DEPARTMENT OF MINES, OIL AND GAS DIVISION

APPLICATION FOR A WELL WORK PERMIT

4) WELL TYPE: A Oil ____/ Gas X/
B (If "Gas", Production X/ Underground storage ____/ Deep ____/ Shallow X/)

5) LOCATION: Elevation: 791' Watershed: Elk River
District: Elk County: Kanawha Quadrangle: Big Sandy

6) WELL OPERATOR D. C. Malcolm, Inc.
Address 1006 Commerce Square
Charleston, WV 25301

7) DESIGNATED AGENT D. C. Malcolm
Address 1006 Commerce Square
Charleston, WV 25301

8) OIL & GAS INSPECTOR TO BE NOTIFIED
Name Jerry Holcomb
Address Box 58
Indore, WV 25111

9) DRILLING CONTRACTOR:
Name Unknown
Address

10) PROPOSED WELL WORK: Drill X/ Drill deeper ____/ Redrill ____/ Stimulate ____/
Plug off old formation ____/ Perforate new formation ____/
Other physical change in well (specify) ____

11) GEOLOGICAL TARGET FORMATION, Devonian Shale

12) Estimated depth of completed well, 4000 feet

13) Approximate trata depths: Fresh, 100 feet; salt, 900 feet.

14) Approximate coal seam depths: ____ Is coal being mined in the area? Yes ____/ No X/

15) CASING AND TUBING PROGRAM

CASING OR TUBING TYPE	SPECIFICATIONS Size	Grade	Weight per ft.	New	Used	FOOTAGE INTERVALS For drilling	Left in well	CEMENT FILL-UP OR SACKS (Cubic feet)	PACKERS
Conductor									Kinds
Fresh water	9-5/8			X		300'	300'	to surface	
Coal									Sizes
Intermediate	7"		20#	X		1800'	1800'	300'	
Production	4½"		10.5	X		4000'	4000'	200'	Depths set or as req.
Tubing									by rule 15.01
Liners									Perforations:
									Top Bottom

The law requires a comment period for surface owners. However, the permit can be issued in less than 15 days from the filing of the Application if the surface owner(s) of record sign(s) the following "Voluntary Statement of No Objection" on a facsimile of this surface owner's copy of the Application.

VOLUNTARY STATEMENT OF NO OBJECTION

I hereby state that I have read the instructions to surface owners on the reverse side of this Application for a Well Work Permit, and that I have received copies of (1) a Notice of Application for a Well Work Permit on Form IV-2(A), (2) an Application for a Well Work Permit on Form IV-2(B), (3) a survey plat on Form IV-6, and (4) a Construction and Reclamation Plan on Form IV-9, all for proposed well work on my surface land as described therein.

I further state that I have no objection to the planned work described in these materials, and I have no objection to a permit being issued based on those materials.

(For execution by corporation, partnership, etc.)

NAME: TREELINE CORPORATION
By Robert F. Jackson X
Its President Date 3-1-84

(For execution by natural persons)

Robert F. Jackson Pres. Date: 1-13-84
(Signature)

____ Date: ____
(Signature)

02/16/2024

Surface Owner

FORM IV-2(B)
Reverse

SURFACE OWNER'S COPY

INSTRUCTIONS TO SURFACE OWNERS AND EXPLANATION OF METHODS AND TIME LIMITS TO COMMENT ON OIL AND GAS WELL WORK PERMIT

The well operator named in the Notice and this Application and the attached materials is applying for a permit from the State to do oil or gas well drilling or other well work. You are being served with these materials because surface owners have the right to file comments before the permit is issued. (**NOTE:** If the surface tract is owned by more than three persons, in multiple heirship for example, then these materials were served on you because your name appeared on the Sheriff's tax ticket on the land or because you actually occupy the surface tract. In either case, you may be the only owner who will actually receive these materials.) See Chapter 22, Article 4 of the W. Va. Code. Permits are valid for 24 months.

If you do not own any interest in the surface tract, please forward these materials to the true owner immediately if you know who it is. Also, please notify the well operator named in the materials and the Administrator of the Office of Oil and Gas in the West Virginia Department of Mines immediately.

NOTE: **You are not required to file any comment at all.**

Where to file comments and obtain additional information:

Administrator of the Office of Oil and Gas
West Virginia Department of Mines
1615 Washington Street East
Charleston, West Virginia 25311
(304) 348-2057

Who may file comments? If you wish to file comments, you must be an owner of record of (1) an interest in the surface tract on which the well already is or is about to be located, or (2) an interest in any other surface tract under the same oil or gas lease which will be utilized for roads or other land disturbances.

Time limits for comments. The law requires these materials to be delivered on or before the date the operator files his Application. You have **FIFTEEN (15) DAYS** after the filing date to file your comments as provided in **Methods for Filing Comments** below. You may call the Administrator's office at the above telephone number to be sure of the date. However, if you have been contacted by the well operator, and if you have signed a "voluntary statement of no objection" to any of the planned work described in these materials, then the permit may be issued at any time.

Comments must be in writing. Your comments must include your name, address and telephone number, the well operator's name and well number, and the approximate location of the proposed well site including district and county from the application. You may add other documents, such as sketches, maps or photographs to support your comments.

Methods for filing comments. Comments must be filed in person or received in the mail at the Administrator's office by the time stated above. Check with your postmaster to ensure adequate delivery time or to arrange special expedited handling.

The Administrator for Oil and Gas has the power to deny or condition a well work permit based on your comments on the following grounds:

"(1) The proposed well work will constitute a hazard to the safety of persons; or
"(2) The plan for soil erosion and sediment control is not adequate or effective; or
"(3) Damage would occur to publicly owned lands or resources; or
"(4) The proposed well work fails to protect fresh water sources or supplies."

If you want a copy of the permit as it is finally issued, or a copy of the order denying the permit, you should request a copy from the Administrator.

List of Water Testing Laboratories. The Administrator maintains a list of water testing laboratories which you can hire to test your water to establish water quality prior to and after drilling. Contact the Adminisatrator's office or an Oil and Gas Inspector to obtain a copy of the list.

02/16/2024

Surface Owner

FORM IV-2(B)
(Obverse)
7-83

SURFACE OWNER'S COPY

1) Date: January 11, 1984
2) Operator's Well No. Treeline #1
3) API Well No. 47 039
State County Permit

STATE OF WEST VIRGINIA
DEPARTMENT OF MINES, OIL AND GAS DIVISION
APPLICATION FOR A WELL WORK PERMIT

4) WELL TYPE: A Oil ____/ Gas X/
B (If "Gas", Production X/ Underground storage ____/ Deep ____/ Shallow X/)

5) LOCATION: Elevation: 791' Watershed: Elk River
District: Elk County: Kanawha Quadrangle: Big Sandy

6) WELL OPERATOR D. C. Malcolm, Inc.
Address 1006 Commerce Square
Charleston, WV 25301

7) DESIGNATED AGENT D. C. Malcolm
Address 1006 Commerce Square
Charleston, WV 25301

8) OIL & GAS INSPECTOR TO BE NOTIFIED
Name Jerry Holcomb
Address Box 58
Indore, WV 25111

9) DRILLING CONTRACTOR:
Name Unknown
Address ____

10) PROPOSED WELL WORK: Drill X/ Drill deeper ____/ Redrill ____/ Stimulate ____/
Plug off old formation ____/ Perforate new formation ____/
Other physical change in well (specify) ____

11) GEOLOGICAL TARGET FORMATION, Devonian Shale

12) Estimated depth of completed well, 4000 feet

13) Approximate trata depths: Fresh, 190 feet; salt, 900 feet.

14) Approximate coal seam depths: ____ Is coal being mined in the area? Yes ____/ No X/

15) CASING AND TUBING PROGRAM

CASING OR TUBING TYPE	SPECIFICATIONS Size	Grade	Weight per ft.	New	Used	FOOTAGE INTERVALS For drilling	Left in well	CEMENT FILL-UP OR SACKS (Cubic feet)	PACKERS
Conductor									Kinds
Fresh water	9-5/8			X		300'	300'	to surface	
Coal									Sizes
Intermediate	7"		20#	X		1800'	1800'	300'	
Production	4½"		10.5	X		4000'	4000'	200'	Depths set or as req. by rule 15.01
Tubing									
Liners									Perforations:
									Top Bottom

The law requires a comment period for surface owners. However, the permit can be issued in less than 15 days from the filing of the Application if the surface owner(s) of record sign(s) the following "Voluntary Statement of No Objection" on a facsimile of this surface owner's copy of the Application.

VOLUNTARY STATEMENT OF NO OBJECTION

I hereby state that I have read the instructions to surface owners on the reverse side of this Application for a Well Work Permit, and that I have received copies of (1) a Notice of Application for a Well Work Permit on Form IV-2(A), (2) an Application for a Well Work Permit on Form IV-2(B), (3) a survey plat on Form IV-6, and (4) a Construction and Reclamation Plan on Form IV-9, all for proposed well work on my surface land as described therein.

I further state that I have no objection to the planned work described in these materials, and I have no objection to a permit being issued based on those materials.

(For execution by corporation, partnership, etc.)

NAME: ____

By ____

Its ____ Date ____

(For execution by natural persons)

Robert F. Jackson Pres. Date: 1-13-84
(Signature)

____ Date: ____
(Signature)

02/16/2024

Surface Owner

FORM IV-2(B)
Reverse

SURFACE OWNER'S COPY

INSTRUCTIONS TO SURFACE OWNERS AND EXPLANATION OF METHODS AND TIME LIMITS TO COMMENT ON OIL AND GAS WELL WORK PERMIT

The well operator named in the Notice and this Application and the attached materials is applying for a permit from the State to do oil or gas well drilling or other well work. You are being served with these materials because surface owners have the right to file comments before the permit is issued. (**NOTE:** If the surface tract is owned by more than three persons, in multiple heirship for example, then these materials were served on you because your name appeared on the Sheriff's tax ticket on the land or because you actually occupy the surface tract. In either case, you may be the only owner who will actually receive these materials.) See Chapter 22, Article 4 of the W. Va. Code. Permits are valid for 24 months.

If you do not own any interest in the surface tract, please forward these materials to the true owner immediately if you know who it is. Also, please notify the well operator named in the materials and the Administrator of the Office of Oil and Gas in the West Virginia Department of Mines immediately.

NOTE: **You are not required to file any comment at all.**

Where to file comments and obtain additional information:

Administrator of the Office of Oil and Gas
West Virginia Department of Mines
1615 Washington Street East
Charleston, West Virginia 25311
(304) 348-2057

Who may file comments? If you wish to file comments, you must be an owner of record of (1) an interest in the surface tract on which the well already is or is about to be located, or (2) an interest in any other surface tract under the same oil or gas lease which will be utilized for roads or other land disturbances.

Time limits for comments. The law requires these materials to be delivered on or before the date the operator files his Application. You have **FIFTEEN (15) DAYS** after the filing date to file your comments as provided in **Methods for Filing Comments** below. You may call the Administrator's office at the above telephone number to be sure of the date. However, if you have been contacted by the well operator, and if you have signed a "voluntary statement of no objection" to any of the planned work described in these materials, then the permit may be issued at any time.

Comments must be in writing. Your comments must include your name, address and telephone number, the well operator's name and well number, and the approximate location of the proposed well site including district and county from the application. You may add other documents, such as sketches, maps or photographs to support your comments.

Methods for filing comments. Comments must be filed in person or received in the mail at the Administrator's office by the time stated above. Check with your postmaster to ensure adequate delivery time or to arrange special expedited handling.

The Administrator for Oil and Gas has the power to deny or condition a well work permit based on your comments on the following grounds:
"(1) The proposed well work will constitute a hazard to the safety of persons; or
"(2) The plan for soil erosion and sediment control is not adequate or effective; or
"(3) Damage would occur to publicly owned lands or resources; or
"(4) The proposed well work fails to protect fresh water sources or supplies."

If you want a copy of the permit as it is finally issued, or a copy of the order denying the permit, you should request a copy from the Administrator.

List of Water Testing Laboratories. The Administrator maintains a list of water testing laboratories which you can hire to test your water to establish water quality prior to and after drilling. Contact the Adminisatrator's office or an Oil and Gas Inspector to obtain a copy of the list.

02/16/2024

Surface Owner

FORM IV-2(B)
(Obverse)
7-83

COAL OWNER'S COPY

1) Date: January 11, 19 84
2) Operator's Well No. Treeline #1
3) API Well No. 47 039
State County Permit

STATE OF WEST VIRGINIA
DEPARTMENT OF MINES, OIL AND GAS DIVISION
APPLICATION FOR A WELL WORK PERMIT

4) WELL TYPE: A Oil ____/ Gas X /
B (If "Gas", Production X / Underground storage ____/ Deep ____/ Shallow X /)

5) LOCATION: Elevation: 791' Watershed: Elk River
District: Elk County: Kanawha Quadrangle: Big Sandy

6) WELL OPERATOR D. C. Malcolm, Inc.
Address 1006 Commerce Square
Charleston, WV 25301

7) DESIGNATED AGENT D. C. Malcolm
Address 1006 Commerce Square
Charleston, WV 25301

8) OIL & GAS INSPECTOR TO BE NOTIFIED
Name Jerry Holcomb
Address Box 52
Indore, WV 25111

9) DRILLING CONTRACTOR:
Name Unknown
Address ____

10) PROPOSED WELL WORK: Drill X / Drill deeper ____/ Redrill ____/ Stimulate ____/
Plug off old formation ____/ Perforate new formation ____/
Other physical change in well (specify) ____

11) GEOLOGICAL TARGET FORMATION, Devonian Shale

12) Estimated depth of completed well, 4000 feet

13) Approximate trata depths: Fresh, 190 feet; salt, 900 feet.

14) Approximate coal seam depths: ____ Is coal being mined in the area? Yes ____/ No X /

15) CASING AND TUBING PROGRAM

CASING OR TUBING TYPE	SPECIFICATIONS Size	Grade	Weight per ft.	New	Used	FOOTAGE INTERVALS For drilling	Left in well	CEMENT FILL-UP OR SACKS (Cubic feet)	PACKERS
Conductor									Kinds
Fresh water	9-5/8			X		300'	300'	to surface	
Coal									Sizes
Intermediate	7"		20#	X		1800'	1800'	300'	
Production	4½"		10.5	X		4000'	4000'	200'	Depths set or as req. by rule 15.01
Tubing									
Liners									Perforations:
									Top Bottom

INSTRUCTIONS TO COAL OPERATOR, OWNER, OR LESSEE

The named coal operator, coal owner(s), and coal lessee are hereby notified that any objection they wish to make or are required to make by Code §22-4-3 must be filed with the Department of Mines within fifteen (15) days after the receipt of this Application by the Department.

The following waiver must be completed by the coal operator and by any coal owner or coal lessee who has recorded a declaration under Code §22-4-20, if the permit is to be issued within fifteen (15) days of the filing of the Application.

WAIVER

The undersigned coal operator ____/ owner ✓ / lessee ____/ of the coal under this well location has examined this proposed well location. If a mine map exists which covers the area of the well location, the well location has been added to the mine map. The undersigned has no objection to the work proposed to be done at this location, provided, the well operator has complied with all applicable requirements of the West Virginia Code and the governing regulations.

TREELINE CORPORATION

Date: 3-1- , 19 84

By Robert L. Jackson

Its President

02/16/2024

Coal Owner

OG-11

STATE OF WEST VIRGINIA
DEPARTMENT OF MINES
OIL AND GAS WELLS DIVISION

RECEIVED
MAY 2 1 1984
OIL & GAS DIVISION
DEPT. OF MINES

INSPECTOR'S WELL REPORT

Permit No. 039-3962 Rev

Oil or Gas Well _____
(KIND)

Company D.C. Makolm Inc.
Address Charleston, WV
Farm Treeline Corp.
Well No. #1
District Elk County Kan.
Drilling commenced _____
Drilling completed _____ Total depth _____
Date shot _____ Depth of shot _____
Initial open flow _____ /10ths Water in _____ Inch
Open flow after tubing _____ /10ths Merc. in _____ Inch
Volume _____ Cu. Ft.
Rock pressure _____ lbs. _____ hrs.
Oil _____ bbls., 1st 24 hrs.
Fresh water _____ feet _____ feet
Salt water _____ feet _____ feet

CASING AND TUBING	USED IN DRILLING	LEFT IN WELL	PACKERS
Size			
16			Kind of Packer
13			
10			Size of
8¼			
6⅝			Depth set
5 3/16			
3			Perf. top
2			Perf. bottom
Liners Used			Perf. top
			Perf. bottom

CASING CEMENTED _____ SIZE _____ No. FT. _____ Date
NAME OF SERVICE COMPANY
COAL WAS ENCOUNTERED AT _____ FEET _____ INCHES
_____ FEET _____ INCHES _____ FEET _____ INCHES
_____ FEET _____ INCHES _____ FEET _____ INCHES

Drillers' Names Clint Hurt Rig #1

Remarks: Run 318 ft. of 8⅝ Casing
Cement with 125 Sacks Class A Cement
Waiting on Cement

5/15/84
DATE

Rod Dillon
DISTRICT WELL INSPECTOR

instead of for the term originally specified therein.

Witness the following signatures and seals:

_____ (Seal) Robert L. Jackson, Pres. (Seal)

02/16/2024

CHARLESTON WV

H. T. HALL

FORM IV-2(B) FILE COPY
(Obverse)
7-83

RECEIVED
FEB 23 1984
OIL & GAS DIVISION
DEPT. OF MINES

1) Date: January 11, 19 84
2) Operator's Well No. Treeline #1
3) API Well No. 47 - 039 - 3962-REN
State County Permit

STATE OF WEST VIRGINIA
DEPARTMENT OF MINES, OIL AND GAS DIVISION
APPLICATION FOR A WELL WORK PERMIT

4) WELL TYPE: A Oil ____ / Gas X /
B (If "Gas", Production X / Underground storage ____ / Deep ____ / Shallow X /)

5) LOCATION: Elevation: 791' Watershed: Elk River
District: Elk County: Kanawha Quadrangle: Big Sandy

6) WELL OPERATOR D. C. Malcolm, Inc.
Address 1006 Commerce Square
Charleston, WV 25301

7) DESIGNATED AGENT D. C. Malcolm
Address 1006 Commerce Square
Charleston, WV 25301

8) OIL & GAS INSPECTOR TO BE NOTIFIED
Name Jerry Holcomb
Address Box 58
Indore, WV 25111

9) DRILLING CONTRACTOR:
Name Unknown
Address ____

10) PROPOSED WELL WORK: Drill X / Drill deeper ____ / Redrill ____ / Stimulate X /
Plug off old formation ____ / Perforate new formation ____ /
Other physical change in well (specify) ____

11) GEOLOGICAL TARGET FORMATION, Devonian Shale

12) Estimated depth of completed well, 4000 feet

13) Approximate trata depths: Fresh, 190 feet; salt, 900 feet.

14) Approximate coal seam depths: ____ Is coal being mined in the area? Yes ____ No X

15) CASING AND TUBING PROGRAM

CASING OR TUBING TYPE	SPECIFICATIONS Size	Grade	Weight per ft.	New	Used	FOOTAGE INTERVALS For drilling	Left in well	CEMENT FILL-UP OR SACKS (Cubic feet)	PACKERS
Conductor									Kinds
Fresh water	9-5/8			X		300'	300'	to surface	NEAT
Coal									Sizes
Intermediate	7"		20#	X		1800'	1800'	300'	
Production	4½"		10.5	X		4000'	4000'	2000'	Depths set or as req.
Tubing									by rule 15.01
Liners									Perforations:
									Top Bottom

RECEIVED
FEB 23 1984
OIL & GAS DIVISION
DEPT. OF MINES

OFFICE USE ONLY
DRILLING PERMIT

Permit number 47-039-3962-REN February 29, 19 84
Date

This permit covering the well operator and well location shown below is evidence of permission granted to drill in accordance with the pertinent legal requirements subject to the conditions contained herein and on the reverse hereof. **Notification must be given to the District Oil and Gas Inspector, (Refer to No. 8) Prior to the construction of roads, locations and pits for any permitted work.** In addition, the well operator or his contractor shall notify the proper district oil and gas inspector 24 hours before actual permitted work has commenced.)

The permitted work is as described in the Notice and Application, plat, and reclamation plan, subject to any modifications and conditions specified on the reverse hereof.

Permit expires March 1, 1986 unless well work is commenced prior to that date and prosecuted with due diligence.

Bond:	Agent: ✓	Plat:	Casing	Fee
BB	MH	MH	MH	386

Margaret J. Hasse
Administrator, Office of Oil and Gas

NOTE: Keep one copy of this permit posted at the drilling location. File

See the reverse side of the APPLICANT'S COPY for instructions to the well operator.

*Inoculate all legumes such as vetch, trefoil and clovers with the proper bacterium. Inoculate with 3X recommended amount.

PLAN PREPARED BY D. C. Malcolm
ADDRESS 1006 Commerce Square
Charleston, WV 25301
PHONE NO. (304) 343-9593

NOTES: Please request landowner cooperation to protect new seedling for one growing season. Attach separate sheets as necessary for comments.

02/16/2024

02/16/2024

OG-11

STATE OF WEST VIRGINIA
DEPARTMENT OF MINES
OIL AND GAS WELLS DIVISION

RECEIVED
MAY 21 1984
OIL & GAS DIVISION
DEPT. OF MINES

INSPECTOR'S WELL REPORT

Permit No. 039-3962 Rev

Oil or Gas Well _____ (KIND)

Company D.C. Makolm Inc.
Address Charleston, WV
Farm Treeline Corp.
Well No. #1
District Elk County Kan.
Drilling commenced _____
Drilling completed _____ Total depth _____
Date shot _____ Depth of shot _____
Initial open flow _____ /10ths Water in _____ Inch
Open flow after tubing _____ /10ths Merc. in _____ Inch
Volume _____ Cu. Ft.
Rock pressure _____ lbs. _____ hrs.
Oil _____ bbls., 1st 24 hrs.
Fresh water _____ feet _____ feet
Salt water _____ feet _____ feet

CASING AND TUBING	USED IN DRILLING	LEFT IN WELL	PACKERS
Size			
16			Kind of Packer
13			
10			Size of
8¼			
6⅝			Depth set
5 3/16			
3			Perf. top
2			Perf. bottom
Liners Used			Perf. top
			Perf. bottom

CASING CEMENTED _____ SIZE _____ No. FT. _____ Date
NAME OF SERVICE COMPANY _____
COAL WAS ENCOUNTERED AT _____ FEET _____ INCHES
_____ FEET _____ INCHES _____ FEET _____ INCHES
_____ FEET _____ INCHES _____ FEET _____ INCHES

Drillers' Names Clint Hurt Rig #1

Remarks: Run 318 ft. of 8⅝ Casing
Cement with 125 Sacks Class A Cement
Waiting on Cement

5/15/84
DATE

Rod Dill
DISTRICT WELL INSPECTOR

02/16/2024

Form 26
2/16/82

STATE OF WEST VIRGINIA

DEPARTMENT OF MINES

OIL AND GAS WELLS DIVISION

INSPECTOR'S PLUGGING REPORT

Permit No. _____ Well No. _____

COMPANY _____ ADDRESS _____

FARM _____ DISTRICT _____ COUNTY _____

Filling Material Used _____

Liner Location Amount Packer Location

PLUGS USED AND DEPTH PLACED			BRIDGES	CASING AND TUBING		
CEMENT-THICKNESS	WOOD-SIZE	LEAD	CONSTRUCTION-LOCATION	RECOVERED	SIZE	LOST

Drillers' Names _____

Remarks:

_____ I hereby certify I visited the above well on this date.

DATE

_____

DISTRICT WELL INSPECTOR

02/16/2024

OG-11

STATE OF WEST VIRGINIA
DEPARTMENT OF MINES
OIL AND GAS WELLS DIVISION

RECEIVED
MAY 2 1 1984
OIL & GAS DIVISION
DEPT. OF MINES

INSPECTOR'S WELL REPORT

Permit No. 039-3962 REN

Oil or Gas Well _____ (KIND)

Company D.C. Malcolm, Inc.
Address Charleston, WV
Farm Treeline Corp
Well No. #1
District Elk County Kan
Drilling commenced _____
Drilling completed _____ Total depth _____
Date shot _____ Depth of shot _____
Initial open flow _____ /10ths Water in _____ Inch
Open flow after tubing _____ /10ths Merc. in _____ Inch
Volume _____ Cu. Ft.
Rock pressure _____ lbs. _____ hrs.
Oil _____ bbls., 1st 24 hrs.
Fresh water _____ feet _____ feet
Salt water _____ feet _____ feet

CASING AND TUBING	USED IN DRILLING	LEFT IN WELL	PACKERS
Size			
16			Kind of Packer
13			
10			Size of
8¼			
6⅝			Depth set
5 3/16			
3			Perf. top
2			Perf. bottom
Liners Used			Perf. top
			Perf. bottom

CASING CEMENTED _____ SIZE _____ No. FT. _____ Date
NAME OF SERVICE COMPANY _____
COAL WAS ENCOUNTERED AT _____ FEET _____ INCHES
_____ FEET _____ INCHES _____ FEET _____ INCHES
_____ FEET _____ INCHES _____ FEET _____ INCHES

Drillers' Names Clint Hurt Rig #1

Remarks: Drilling on fluid at 870 ft.

5/16/84
DATE

Rod Dillon
DISTRICT WELL INSPECTOR

5/21/84
DATE

Rodney Dillon
DISTRICT WELL INSPECTOR

7/13/84
DATE

Rod Dillon
DISTRICT WELL INSPECTOR

Form 26
2/16/82

STATE OF WEST VIRGINIA
DEPARTMENT OF MINES

Form 26
2/16/82

STATE OF WEST VIRGINIA
DEPARTMENT OF MINES

Form 26
2/16/82

STATE OF WEST VIRGINIA
DEPARTMENT OF MINES
OIL AND GAS WELLS DIVISION

INSPECTOR'S PLUGGING REPORT

Permit No. _____ Well No. _____

COMPANY _____ ADDRESS _____

FARM _____ DISTRICT _____ COUNTY _____

Filling Material Used _____

Liner Location Amount Packer Location

PLUGS USED AND DEPTH PLACED			BRIDGES	CASING AND TUBING		
CEMENT-THICKNESS	WOOD-SIZE	LEAD	CONSTRUCTION-LOCATION	RECOVERED	SIZE	LOST

Drillers' Names _____

Remarks:

02/16/2024

_____ I hereby certify I visited the above well on this date.
DATE

_____
DISTRICT WELL INSPECTOR

OG-11

STATE OF WEST VIRGINIA

DEPARTMENT OF MINES

OIL AND GAS WELLS DIVISION

INSPECTOR'S WELL REPORT

Permit No. 039-3962 REN

Oil or Gas Well GAS (KIND)

Company D.C. MALCOLM INC.

Address CHARLESTON

Farm TREELINE CORP.

Well No. #1

District ELK County KAN

Drilling commenced

Drilling completed Total depth

Date shot Depth of shot

Initial open flow /10ths Water in Inch

Open flow after tubing /10ths Merc. in Inch

Volume Cu. Ft.

Rock pressure lbs. hrs.

Oil bbls., 1st 24 hrs.

Fresh water feet feet

Salt water feet feet

CASING AND TUBING	USED IN DRILLING	LEFT IN WELL	PACKERS
Size			
16			Kind of Packer
13			
10			Size of
8¼			
6⅝			Depth set
5 3/16			
3			Perf. top
2			Perf. bottom
Liners Used			Perf. top
			Perf. bottom

RECEIVED OCT 9 1984 OIL & GAS DIVISION DEPT. OF MINES

CASING CEMENTED SIZE No. FT. Date

NAME OF SERVICE COMPANY

COAL WAS ENCOUNTERED AT FEET INCHES

FEET INCHES FEET INCHES

FEET INCHES FEET INCHES

Drillers' Names

Remarks: MAKE FINAL INSPECTION
LOCATION RECLAIMED & SEEDED GRASS DON'T LOOK VERY GOOD
GOING TO WAIT AWHILE BEFORE RELEASING

10/3/84
DATE

Rod Dillon
DISTRICT WELL INSPECTOR

Form 26
2/16/82

STATE OF WEST VIRGINIA

DEPARTMENT OF MINES

OIL AND GAS WELLS DIVISION

INSPECTOR'S PLUGGING REPORT

Permit No. _____ Well No. _____

COMPANY _____ ADDRESS _____

FARM _____ DISTRICT _____ COUNTY _____

Filling Material Used _____

Liner	Location	Amount	Packer	Location

PLUGS USED AND DEPTH PLACED			BRIDGES	CASING AND TUBING		
CEMENT-THICKNESS	WOOD-SIZE	LEAD	CONSTRUCTION-LOCATION	RECOVERED	SIZE	LOST

Drillers' Names _____

Remarks:

_____ I hereby certify I visited the above well on this date.
DATE

_____
DISTRICT WELL INSPECTOR

02/16/2024

IV-20
Obverse
1-84

RECEIVED
OCT 15 1984
OIL & GAS DIVISION
DEPT. OF MINES

State of West Virginia
Department of Mines
Oil and Gas Division
Charleston 25305

FINAL INSPECTION REPORT
INSPECTORS COMPLIANCE REPORT
October 1, 1984

COMPANY D. C. Malcolm, Inc. PERMIT NO 039-3962

1006 Commerce Square FARM & WELL NO Treeline Corp.

Charleston, West Virginia 25301 DIST. & COUNTY Elk/Kanawha

RULE	DESCRIPTION	IN COMPLIANCE YES	NO
23.06	Notification Prior to Starting Work		
25.04	Prepared before Drilling to Prevent Waste		
25.03	High-Pressure Drilling		
16.01	Required Permits at Wellsite		
15.03	Adequate Fresh Water Casing		
15.02	Adequate Coal Casing		
15.01	Adequate Production Casing		
15.04	Adequate Cement Strenght		
15.05	Cement Type		
23.02	Maintained Access Roads		
25.01	Necessary Equipment to Prevent Waste		
23.04	Reclaimed Drilling Pits		
23.05	No Surface or Underground Pollution		
23.07	Requirements for Production & Gathering Pipelines		
16.01	Well Records on Site		
16.02	Well Records Filed		
7.05	Identification Markings		

I HAVE INSPECTED THE ABOVE CAPTIONED WELL AND RECOMMEND THAT IT BE RELEASED:

SIGNED Rod Dillon

DATE 10/4/84

Your well record was received and reclamation requirements approved. In accordance with Chapter 22, Article 4, Section 2, the above well will remain under bond coverage for the life of the well.

Administrator-Oil & Gas Division
December 28, 1984
DATE

TMS/nw

land is operated by the Lessee in the search for or production of oil or gas, instead of for the term originally specified therein.

Witness the following signatures and seals:

(Seal) Robert F. Jackson, Pres. (Seal)

OG-11

STATE OF WEST VIRGINIA
DEPARTMENT OF MINES
OIL AND GAS WELLS DIVISION

RECEIVED
MAY 30 1984
OIL & GAS DIVISION
DEPT. OF MINES

INSPECTOR'S WELL REPORT

Permit No. 039-3962 REN

Oil or Gas Well _____ (KIND)

Company D.C. MALCOLM
Address CHARLESTON
Farm TREELINE
Well No. 1
District ELK County KAN
Drilling commenced _____
Drilling completed _____ Total depth _____
Date shot _____ Depth of shot _____
Initial open flow _____ /10ths Water in _____ Inch
Open flow after tubing _____ /10ths Merc. in _____ Inch
Volume _____ Cu. Ft.
Rock pressure _____ lbs. _____ hrs.
Oil _____ bbls., 1st 24 hrs.
Fresh water _____ feet _____ feet
Salt water _____ feet _____ feet

CASING AND TUBING	USED IN DRILLING	LEFT IN WELL	PACKERS
Size			
16			Kind of Packer
13			
10			Size of
8¼			
6⅝			Depth set
5 3/16			
3			Perf. top
2			Perf. bottom
Liners Used			Perf. top
			Perf. bottom

CASING CEMENTED _____ SIZE _____ No. FT. _____ Da
NAME OF SERVICE COMPANY _____
COAL WAS ENCOUNTERED AT _____ FEET _____ INCHE
_____ FEET _____ INCHES _____ FEET _____ INCHE
_____ FEET _____ INCHES _____ FEET _____ INCHE

Drillers' Names Clint Hurt Rig #1

Remarks: Drilled In
Setting On Location

5/21/84
DATE

Rodney Dillon
DISTRICT WELL INSPECTOR

02/16/2024

7/13/84
DATE

Rod Dillon
DISTRICT WELL INSPECTOR

Form 26
2/16/82

STATE OF WEST VIRGINIA
DEPARTMENT OF MINES
OIL AND GAS WELLS DIVISION

Form 26
2/16/82

STATE OF WEST VIRGINIA
DEPARTMENT OF MINES
OIL AND GAS WELLS DIVISION

INSPECTOR'S PLUGGING REPORT

Permit No. _____ Well No. _____

COMPANY _____ ADDRESS _____

FARM _____ DISTRICT _____ COUNTY _____

Filling Material Used _____

Liner Location Amount Packer Location

PLUGS USED AND DEPTH PLACED			BRIDGES	CASING AND TUBING		
CEMENT-THICKNESS	WOOD-SIZE	LEAD	CONSTRUCTION-LOCATION	RECOVERED	SIZE	LOST

Drillers' Names _____

Remarks:

_____ I hereby certify I visited the above well on this date.
DATE

02/16/2024

_____
DISTRICT WELL INSPECTOR

Rec'd 5-9-83

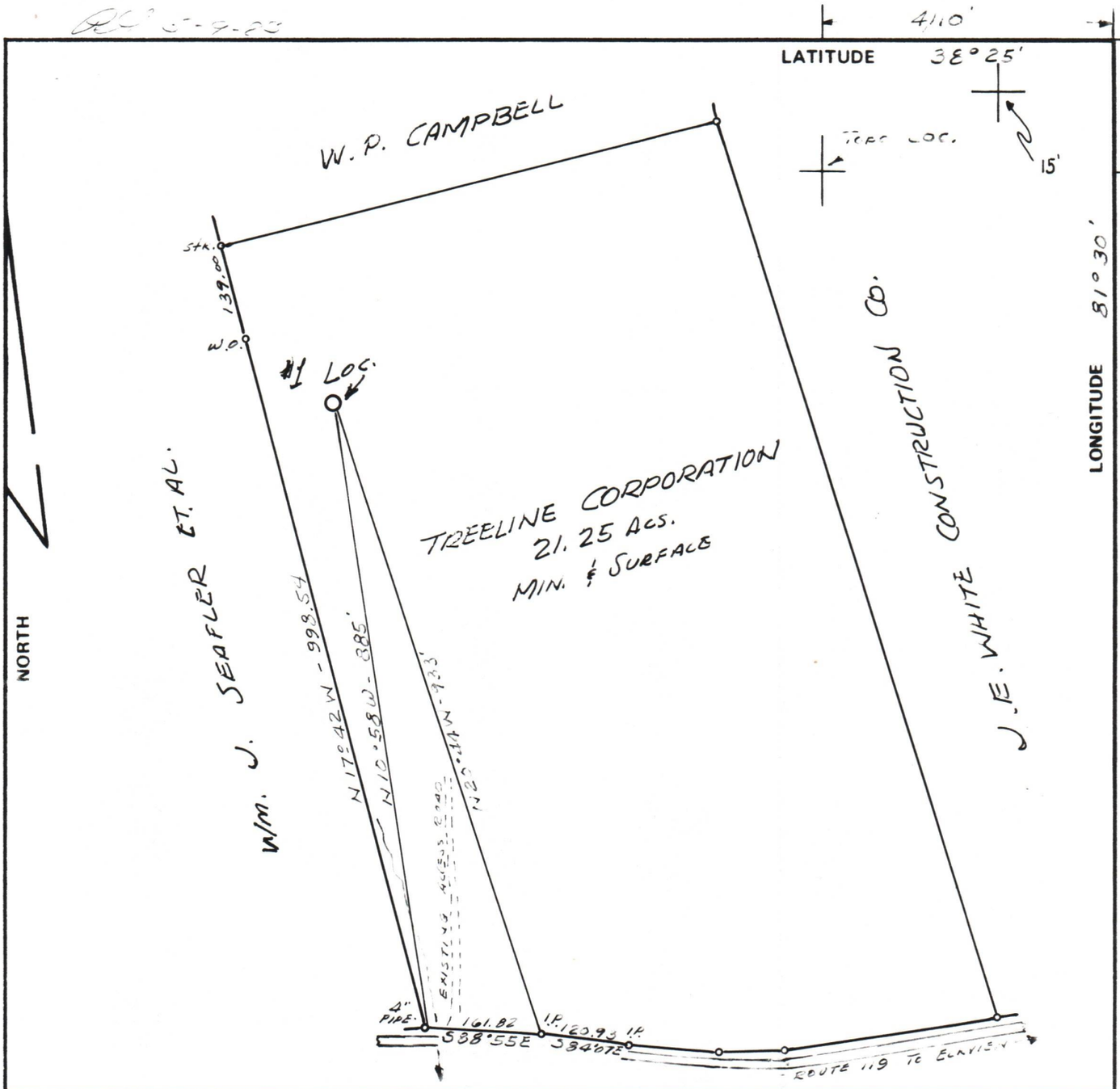

FILE NO. _____
DRAWING NO. _____
SCALE 1" = 200'
MINIMUM DEGREE OF ACCURACY 1 IN 200
PROVEN SOURCE OF ELEVATION U.S.G.S. El. 612
Road Intersection on Rt 119

I THE UNDERSIGNED, HEREBY CERTIFY THAT THIS PLAT IS CORRECT TO THE BEST OF MY KNOWLEDGE AND BELIEF AND SHOWS ALL THE INFORMATION REQUIRED BY LAW AND THE REGULATIONS ISSUED AND PRESCRIBED BY THE DEPARTMENT OF MINES.

(SIGNED) James D Sefton
R.P.E. _____ L.L.S. 149

PLACE SEAL HERE

(+) DENOTES LOCATION OF WELL ON UNITED STATES TOPOGRAPHIC MAPS

FORM IV-6
(8-78)

DATE 9-18, 1982
OPERATOR'S WELL NO. one
API WELL NO.
47 - 039 - 3962-Rem.
STATE COUNTY PERMIT

STATE OF WEST VIRGINIA
DEPARTMENT OF MINES
OIL AND GAS DIVISION

WELL TYPE: OIL ___ GAS ✓ LIQUID INJECTION ___ WASTE DISPOSAL ___
(IF "GAS,") PRODUCTION ___ STORAGE ___ DEEP ___ SHALLOW ___
LOCATION: ELEVATION 791'0 WATER SHED ELK RIVER
DISTRICT ELK COUNTY KANAWHA
QUADRANGLE BIG CHIMNEY 7.5'
SURFACE OWNER TREELINE CORPORATION ACREAGE 21.25
OIL & GAS ROYALTY OWNER TREELINE CORPORATION LEASE ACREAGE _____
LEASE NO. _____

PROPOSED WORK: DRILL ✓ CONVERT ___ DRILL DEEPER ___ REDRILL ___ FRACTURE OR STIMULATE ___ PLUG OFF OLD FORMATION ___ PERFORATE NEW FORMATION ___ OTHER PHYSICAL CHANGE IN WELL (SPECIFY) _____

PLUG AND ABANDON ___ CLEAN OUT AND REPLUG ___
TARGET FORMATION Dev. Shale ESTIMATED DEPTH 4000'
WELL OPERATOR D.C. MALCOLM INC. DESIGNATED AGENT D.C. MALCOLM
ADDRESS 1006 Commerce Sq. ADDRESS 1006 Commerce Sq.
CHARLESTON, WV CHARLESTON, W.V.

02/16/2024

KAN. - 3962

H.T. HALL

RECEIVED
AUG - 8 1984
OIL & GAS DIVISION
DEPT. OF MINES

IV-35
(Rev 8-81)

State of West Virginia
Department of Mines
Oil and Gas Division

Date August 1, 1984
Operator's
Well No. 1
Farm Treeline Corp.
API No. 047 - 039 - 3962 REN

RECEIVED
SEP 1 2 1984
OIL & GAS DIVISION
DEPT. OF MINES

WELL OPERATOR'S REPORT
OF
DRILLING, FRACTURING AND/OR STIMULATING, OR PHYSICAL CHANGE

WELL TYPE: Oil X / Gas X / Liquid Injection ___ / Waste Disposal ___
(If "Gas," Production ___ / Underground Storage ___ / Deep ___ / Shallow ___ /)

LOCATION: Elevation: 802 KB Watershed Elk River
District: Elk County Kanawha Quadrangle Big Sandy

COMPANY D. C. Malcolm, Inc.
ADDRESS 1006 Commerce Sq., Charleston, WV
DESIGNATED AGENT D. C. Malcolm
ADDRESS 1006 Commerce Sq., Charleston, WV
SURFACE OWNER Treeline Corporation
ADDRESS Box 18 Reynolds Ave., Elkview, WV 25071
MINERAL RIGHTS OWNER Treeline Corp.
ADDRESS Box 18 Reynolds Ave., Elkview, WV
OIL AND GAS INSPECTOR FOR THIS WORK Rodney Dillon ADDRESS P.O.Box 7, Williamstown
PERMIT ISSUED 2-29-84
DRILLING COMMENCED 5-14-84
DRILLING COMPLETED 5-19-84
IF APPLICABLE: PLUGGING OF DRY HOLE ON CONTINUOUS PROGRESSION FROM DRILLING OR REWORKING. VERBAL PERMISSION OBTAINED ON ___

Casing & Tubing	Used in Drilling	Left in Well	Cement fill up Cu. ft.
Size 20-16 Cond.			
13-10"			
9 5/8	318	318	To Surf.
8 5/8			
7	1518	1518	45 sx
5 1/2			
4 1/2	2146	2146	75 sx
3			
2	2100	2100	-
Liners used			

GEOLOGICAL TARGET FORMATION Berea Depth 2135 feet
Depth of completed well 2176 feet Rotary X / Cable Tools ___
Water strata depth: Fresh 135 feet; Salt 850 feet
Coal seam depths: No Coal Is coal being mined in the area? No

OPEN FLOW DATA
Producing formation Weir Pay zone depth 1820-2104 feet
Gas: Initial open flow show Mcf/d Oil: Initial open flow show Bbl/d
Final open flow 80 Mcf/d Final open flow 5 Bbl/d
Time of open flow between initial and final tests ___ hours
Static rock pressure ___ psig (surface measurement) after ___ hours shut in
(If applicable due to multiple completion--)
Second producing formation ___ Pay zone depth ___ feet
Gas: Initial open flow ___ Mcf/d Oil: Initial open flow ___ Bbl/d
Final open flow ___ Mcf/d Oil: Final open flow ___ Bbl/d
Time of open flow between initial and final tests ___ hours
Static rock pressure ___ psig (surface measurement) after ___ hours shut in

(Continue on reverse side)

KW. - 3962

FORM IV-35
(REVERSE)

DETAILS OF PERFORATED INTERVALS, FRACTURING OR STIMULATING, PHYSICAL CHANGE, ETC.

1st Stage - Perforated 2056-2093 with 15 holes
Foam frac with 500 gal. FE Acid, 186 bbls. water (kcl), 23000# 20/40 sand, 512000 $SCFN_2$, 8 perf balls.

2nd Stage - With baffle at 2033, perforated 1825-1953 with 15 holes.
Foam frac with 500 gal. FE Acid (28%), 151 bbls. water (kcl), 7000# 20/40 sand, 486000 $SCFN_2$.

WELL LOG

FORMATION COLOR HARD OR SOFT	TOP FEET	BOTTOM FEET	REMARKS Including indication of all fresh and salt water, coal, oil and gas
Shale and Siltstone	0	136	
Sand	136	332	
Sand and Shale	332	846	
Sand (Salt Sand)	846	1397	
Shale	1397	1428	
Lime (Little Lime)	1428	1491	
Lime (Greenbrier)	1491	1690	
Sand (Injun)	1690	1750	s/o
Silt and Shale	1750	1820	
Sand (Weir)	1820	1856	s/g
Shale	1856	1950	
Sand (Weir)	1950	1976	s/g
Shale	1976	2052	
Sand (Weir)	2052	2104	s/g
Shale	2104	2135	
Sand (Berea)	2135	2140	
Shale	2140	2176	T.D.

(Attach separate sheets as necessary)

D. C. Malcolm, Inc.
Well Operator

By: D C Malcolm, President 02/16/2024

Date: August 1, 1984

Note: Regulation 2.02(i) provides as follows:
"The term 'log' or 'well log' shall mean a systematic detailed geological record of all formations, including coal, encountered in the drilling of a well."

FORM IV-36

[08-78]

Date: August 1, 1984

Operator's Well No. Treeline #1

API Well No. 47 - 039 - 3962
State County Permit

REN

STATE OF WEST VIRGINIA
DEPARTMENT OF MINES, OIL AND GAS DIVISION

WELL OPERATOR'S REPORT OF INITIAL GAS-OIL RATIO TEST

WELL OPERATOR D. C. Malcolm, Inc.
Address 1006 Commerce Square
Charleston, WV 25301

DESIGNATED AGENT D. C. Malcolm
Address 1006 Commerce Squre
Charleston, WV 25301

GEOLOGICAL TARGET FORMATION: Berea

Depth 2135 feet

Perforation Interval 1825-2093 feet

GUIDELINES FOR TESTING:

1- *A minimum of gas vented or flared*
2- *A 24 hour preflow into pipelines or tanks*
3- *Uniform producing rate during the 24 hour test per test period*
4- *Measurement standards as for Form IV-39, "Report of Annual Production" (see Regulation 31.01)*
5- *Separate Form IV-36 for each producing formation in a multiple completion*

RECEIVED
SEP 12 1984
OIL & GAS DIVISION
DEPT. OF MINES

TEST DATA

START OF TEST-DATE	TIME	END OF TEST-DATE	TIME	DURATION OF TEST

TUBING PRESSURE	CASING PRESSURE	SEPARATOR PRESSURE	SEPARATOR TEMPERATURE

OIL PRODUCTION DURING TEST	GAS PRODUCTION DURING TEST	WATER PRODUCTION DURING TEST & SALINITY
bbls.	Mcf	bbls. ppm.

OIL GRAVITY	PRODUCING METHOD (Flowing, pumping, gas lift, etc.)
°API	

GAS PRODUCTION

MEASUREMENT METHOD		POSITIVE CHOKE ☐
FLANGE TAP ☐	PIPE TAP ☐ L-10 ☐	CRITICAL FLOW PROVER ☐
ORIFICE DIAMETER	PIPE DIAMETER (INSIDE DIAM.)	NOMINAL CHOKE SIZE - IN.
DIFFERENTIAL PRESSURE RANGE	MAX. STATIC PRESSURE RANGE	PROVER & ORIFICE DIAM. - IN.
DIFFERENTIAL	STATIC	GAS GRAVITY (Air-1.0) MEASURED ____ ESTIMATED ____
GAS GRAVITY (Air-1.0)	FLOWING TEMPERATURE	GAS TEMPERATURE ____ °F
24 HOUR COEFFICIENT		24 HOUR COEFFICIENT
		PRESSURE - psia

TEST RESULTS

DAILY OIL	DAILY WATER	DAILY GAS	GAS-OIL RATIO
5 bbls.	0 bbls.	80 Mcf.	80,000/5 SCF/STB

D. C. Malcolm, Inc.
Well Operator

By: D C Malcolm

Its: President

02/16/2024

216 - 138

BOOK 216 PAGE 138

EXTENSION OF LEASE

THIS AGREEMENT, Made this 15th day of November, 1982, between Treeline Corporation

as first party, and D. C. Malcolm, Inc. as second party,

WITNESSETH: WHEREAS, the second party is the present owner of that certain leasehold estate for oil and gas purposes, having fully complied with the several terms and provisions thereof, executed by Hugh W. Young, et al to D. C. Malcolm, Inc. bearing date the 22nd day of February, 1982, and recorded in the office of the Clerk of the County Court of Kanawha County, West Virginia, in Book 212, at page 334, upon a tract of 21 acres, more or less of land, in Big Sandy District of said County, bounded substantially as follows:

On the North by the lands of Orville Hackney Estate

On the East by the lands of J. E. White

On the South by the lands of Route 119

On the West by the lands of Seafler, and,

WHEREAS, the party of the first part the present owner of all of the land embraced in said lease, and all of the rentals and royalties accruing thereunder, and have agreed with the second party upon an extension of the term of said lease;

NOW THEREFORE, in consideration of the premises, and the sum of One ($1.00) Dollar, the receipt whereof is hereby acknowledged, the said party of the first part does further grant and demise the said tract of land to the party of the second part, its successors and assigns, for the purposes of said original lease, for and during an additional term of nine months ~~years~~ from and after the 15th day of November, 1982, and so long after the expiration of said additional term of years as the said land is operated by the Lessee in the search for or production of oil or gas.

TO HAVE AND TO HOLD unto the said party of the second part during said additional period of years upon the same terms, rentals and royalties as are set forth in said original lease; it being the intention hereof that the said lease shall be of the same character, force and effect as if it had been originally granted for the term of nine months ~~years~~, and as long thereafter as the said land is operated by the Lessee in the search for or production of oil or gas, instead of for the term originally specified therein.

02/16/2024

Witness the following signatures and seals:

(Seal) Robert L. Jackson, Pres. (Seal)

D C MALCOLM INC

FORM IV-2(B) FILE COPY
(Obverse)
7-83

RECEIVED
FEB 23 1984
OIL & GAS DIVISION
DEPT. OF MINES

1) Date: January 11, 19 84
2) Operator's Well No. Treeline #1
3) API Well No. 47 - 039 - 3962-REN
State County Permit

STATE OF WEST VIRGINIA
DEPARTMENT OF MINES, OIL AND GAS DIVISION
APPLICATION FOR A WELL WORK PERMIT

4) WELL TYPE: A Oil ____ / Gas X /
B (If "Gas", Production X / Underground storage ____ / Deep ____ / Shallow X /)

5) LOCATION: Elevation: 791' Watershed: Elk River
District: Elk County: Kanawha Quadrangle: Big Sandy

6) WELL OPERATOR D. C. Malcolm, Inc.
Address 1006 Commerce Square
Charleston, WV 25301

7) DESIGNATED AGENT D. C. Malcolm
Address 1006 Commerce Square
Charleston, WV 25301

8) OIL & GAS INSPECTOR TO BE NOTIFIED
Name Jerry Holcomb
Address Box 58
Indore, WV 25111

9) DRILLING CONTRACTOR:
Name Unknown
Address ____

10) PROPOSED WELL WORK: Drill X / Drill deeper ____ / Redrill ____ / Stimulate X /
Plug off old formation ____ / Perforate new formation ____ /
Other physical change in well (specify) ____

11) GEOLOGICAL TARGET FORMATION, Devonian Shale

12) Estimated depth of completed well, 4000 feet

13) Approximate trata depths: Fresh, 190 feet; salt, 900 feet.

14) Approximate coal seam depths: ____ Is coal being mined in the area? Yes ____ No X /

15) CASING AND TUBING PROGRAM

CASING OR TUBING TYPE	SPECIFICATIONS Size	Grade	Weight per ft.	New	Used	FOOTAGE INTERVALS For drilling	Left in well	CEMENT FILL-UP OR SACKS (Cubic feet)	PACKERS
Conductor									Kinds
Fresh water	9-5/8			X		300'	300'	to surface	NEAT
Coal									Sizes
Intermediate	7"		20#	X		1800'	1800'	300'	
Production	4½"		10.5	X		4000'	4000'	2000'	Depths set or as req. by rule 15.01
Tubing									
Liners									Perforations:
									Top Bottom

RECEIVED
FEB 23 1984
OIL & GAS DIVISION
DEPT. OF MINES

OFFICE USE ONLY
DRILLING PERMIT

Permit number 47-039- 3962-REN

February 29, 19 84
Date

This permit covering the well operator and well location shown below is evidence of permission granted to drill in accordance with the pertinent legal requirements subject to the conditions contained herein and on the reverse hereof. **Notification must be given to the District Oil and Gas Inspector, (Refer to No. 8) Prior to the construction of roads, locations and pits for any permitted work.** In addition, the well operator or his contractor shall notify the proper district oil and gas inspector 24 hours before actual permitted work has commenced.)

The permitted work is as described in the Notice and Application, plat, and reclamation plan, subject to any modifications and conditions specified on the reverse hereof.

Permit expires March 1, 1986 unless well work is commenced prior to that date and prosecuted with due diligence.

Bond:	Agent: ✓	Plat:	Casing	Fee
BB	MH	MH	MH	386

Margaret T. Hasse
Administrator, Office of Oil and Gas

NOTE: Keep one copy of this permit posted at the drilling location.

File

See the reverse side of the APPLICANT'S COPY for instructions to the well operator.

FORM IV-2(B) **FILE COPY**
Reverse

OFFICE USE ONLY

PERMIT MODIFICATIONS AND CONDITIONS (IF ANY) TO THE PROPOSED WELL WORK

OFFICE USE ONLY

This part of Form IV-2(b) is to record the dates of certain occurrences and any follow-up inspections.

	Date	Date(s)
Application received		Follow-up inspection(s)
Well work started	,,	,,
Completion of the drilling process	,,	,,
Well Record received	,,	,,
Reclamation completed	,,	,,

OTHER INSPECTIONS

Reason: _____

Reason: _____

02/16/2024

APR. 7 1983

IV-9
(Rev 8-81)

DATE March 21, 1983
WELL NO. Treeline #1
API NO. 47-039-3962-Ken

State of West Virginia
Department of Mines
Oil and Gas Division

CONSTRUCTION AND RECLAMATION PLAN

COMPANY NAME D. C. Malcolm, Inc.
Address 1006 Commerce Square
Telephone Charleston, WV 25301 343-9593
LANDOWNER Treeline Corporation

DESIGNATED AGENT D. C. Malcolm
Address 1006 Commerce Square
Telephone Charleston, WV 25301 343-9593
SOIL CONS. DISTRICT

Revegetation to be carried out by D. C. Malcolm (Agent)

This plan has been reviewed by CAPITOL SCD. All corrections and additions become a part of this plan: APR. 13 1983 (Date)

R. C. Alford (SCD Agent)

ACCESS ROAD

Structure Cross drains (A)
Spacing as needed & specified
Page Ref. Manual 2-1, 2-3, 2-4 + 2-2

Structure (B)
Spacing
Page Ref. Manual

Structure (C)
Spacing
Page Ref. Manual

LOCATION

Structure Drilling pit (1)
Material earth--lined w/ plastic
Page Ref. Manual

Structure Diversion Ditch (2)
Material earth
Page Ref. Manual 2-12 + 2-13

Structure Rip rap (3)
Material rock
Page Ref. Manual ~~2-16~~ 2-10

All structures should be inspected regularly and repaired if necessary. All commercial timber is to be cut and stacked and all brush and small timber to be cut and removed from the site before dirt work begins.

REVEGETATION

Treatment Area I

Lime 3 Tons/acre
or correct to pH 6.5
Fertilizer 1000 lbs/acre
(~~10-20-20~~ 10-10-10 or equivalent)
Mulch Hay 3 Tons/acre
Seed* Ky 31 40 ~~35~~ lbs/acre
Annual Rye 20 ~~10~~ lbs/acre
lbs/acre

Treatment Area II

Lime 3 Tons/acre
or correct to pH 6.5
Fertilizer 1000 lbs/acre
(~~10-20-20~~ 10-10-10 or equivalent)
Mulch Hay 3 Tons/acre
Seed* Ky 31 40 ~~35~~ lbs/acre
Annual Rye 20 ~~10~~ lbs/acre
lbs/acre

**Inoculate all legumes such as vetch, trefoil and clovers with the proper bacterium. Inoculate with 3X recommended amount.*

PLAN PREPARED BY D. C. Malcolm
ADDRESS 1006 Commerce Square
Charleston, WV 25301
PHONE NO. (304) 343-9593

NOTES: Please request landowner's cooperation to protect new seedling for one growing season. Attach separate sheets as necessary for comments.

15. This lease embodies the entire contract and agreement between Lessor and Lessee, and no warranties, representations, promises or inducements not herein expressed have been made or relied upon by either party. The terms, conditions and stipulations hereof shall extend to the respective heirs, executors, administrators, successors and assigns of the parties hereto.

Witness the hands and seals of the parties hereto the day and year first above written.

WITNESS:

Treeline Corporation by:

Hugh W. Young, Pres. (SEAL)
Robert L. Jackson, Secretary-Treas. (SEAL)
Alfredo C. Velasquez, V. Pres. (SEAL)
(SEAL)
(SEAL)
(SEAL)
(SEAL)
(SEAL)

WEST VIRGINIA ACKNOWLEDGMENT

STATE OF WEST VIRGINIA
COUNTY OF ..... } To-wit:

I, ..., a Notary Public of said County, do hereby certify that .....

whose name ..... signed to the within writing bearing date the ..... day of ....., 19.....
ha..... this day acknowledged the same before me in my said County.

Given under my hand this ..... day of ....., 19.....

Notary Public

My Commission expires .....

WEST VIRGINIA ACKNOWLEDGMENT

STATE OF WEST VIRGINIA
COUNTY OF Kanawha } To-wit:

I, Mary E. Malcolm, a Notary Public of said County, do hereby certify that
Alfredo C. Velasquez, Hugh W. Young, and Robert L. Jackson
whose names are signed to the within writing bearing date the 22nd day of February 19 82
have this day acknowledged the same before me in my said County.

Given under my hand this 26th day of May, 19 82.

Mary E. Malcolm
Notary Public

My Commission expires 2-9-92

OHIO ACKNOWLEDGMENT

STATE OF OHIO,
COUNTY OF ..... } SS.

Before me, a Notary Public in and for said county, personally appeared the above named .....

that ..... he ..... did sign the foregoing instrument, and that the same is ..... who acknowledged
whereof I have hereunto subscribed my name at ..... free act and deed. In testimony
day of ....., 19.....

My Commission expires .....

Notary Public

This instrument was presented to the Clerk of the County Commission of Kanawha County, West Virginia, on JUN 11 1982 and the same is admitted to record.
Teste: Mary Ann Jackson Clerk
Kanawha County Commission

Prepared by:
D.C. Malcolm

RECORDING DATA:
Term ..... County ..... State .....
Location ..... Acres ..... Date ..... , 19

TO

Globe Form 100
Oil and Gas Lease

GLOBE PRINTING AND BINDING CO., PARKERSBURG, W. VA.

_____ (Seal)	Alfredo C. Velasquez, V. P. (Seal)
_____ (Seal)	Hugh W. Young, Sec.-Treas. (Seal)
_____ (Seal)	_____ (Seal)
_____ (Seal)	_____ (Seal)
_____ (Seal)	_____ (Seal)
_____ (Seal)	_____ (Seal)
_____ (Seal)	_____ (Seal)

STATE OF WEST VIRGINIA,
COUNTY OF Kanawha } to-wit:

I, Loretta L. Bird, a Notary of said County of Kanawha do certify that Robert L. Jackson, Alfredo C. Velasquez and Hugh W. Young ~~his wife~~, whose names are signed to the within writing, bearing date the 15th day of Nov., A. D. 1982, have this day acknowledged the same before me in my said County.

Given under my hand this 4th day of February, A. D., 1983.

My commission expires on the 21st. day of Oct., 1984

Loretta L. Bird

FEB 9 1983

Clerk

Kanawha County Commission

STATE OF _____
COUNTY OF _____ } to-wit:

I, _____, a _____ of said County of _____ do certify that _____ and _____ his wife, whose name _____ signed to the within writing, bearing date the _____ day of _____, A. D. 19___, ha___ this day acknowledged the same before me in my said County.

Given under my hand this _____ day of _____, A. D., 19___

My commission expires _____

_____

_____

4.50

222-47

BOOK 222 PAGE 47

RECEIVED

DEC 16 1983

Ans'd..............

OIL AND GAS LEASE

AGREEMENT made and entered into this 14th day of December A. D. 1983,

by and between Treeline Corporation

of Elkview, West Virginia party of the first part, hereinafter called Lessor (whether one or more),

and D. C. Malcolm, Inc. party of the second part, hereinafter called Lessee;

1. WITNESSETH: That the Lessor, in consideration of the sum of One Dollar, the receipt of which is hereby acknowledged, and the covenants and agreements hereinafter contained, does hereby grant unto the Lessee all of the oil and gas and all of the constituents of either in and under the land hereinafter described, together with the exclusive right to drill for, produce and market oil and gas and their constituents and of storing gas of any kind in any formation underlying the land, and also the right to enter thereon at all times for the purpose of drilling and operating for oil, gas and water, laying pipe lines, erecting tanks, machinery, powers and structures, and to possess, use, and occupy so much of said premises as is necessary and convenient for said purposes and to convey the above named products therefrom or thereto by pipe lines or otherwise; said land being situate in Big Sandy District, xxxxxxx County of Kanawha, State of West Virginia, and described as follows, to-wit: Bounded on the

NORTH by lands of Orville Hackney Estate,

EAST by lands of J. E. White,

SOUTH by lands of Route 119,

WEST by lands of Seafler,

and containing twenty-one (21) acres, more or less. It being the intention to describe herein all of the lands of the lessor located in the Township or District aforesaid.

2. It is agreed that this lease shall remain in force for a term of sixty days xxxx from this date and as long thereafter as operations for oil or gas are being conducted on the premises, or oil or gas is found in paying quantities thereon, xr [illegible]

3. The Lessee shall deliver to the credit of the Lessor free of cost, in the pipe line to which he may connect his wells, the equal one-eighth (1/8) part of all oil produced and saved from the leased premises, and shall pay Lessor one-eighth of the wellhead price for all gas produced and sold from the premises, payable quarterly; provided, Lessee shall pay Lessor a royalty at the rate of Fifty Dollars per year on each gas well while, through lack of market, gas therefrom is not sold or used off the premises, and while said royalty is so paid said well shall be held to be a paying well under paragraph 2 hereof.

4. The Lessee shall commence operations for a well on the premises on or before ...., 19......, or pay thereafter a rental of .... for each .... months that operations are delayed from the time above mentioned. The consideration first recited herein, the down payment, shall cover not only the privilege granted to the date when first said rental is payable as aforesaid, but also the Lessee's option of extending that period as aforesaid, and any and all other rights conferred. The drilling of a non-productive well shall be accepted by the Lessor in lieu of delay rental for a period of one year after its completion, and following the exhaustion or abandonment of all wells the Lessee shall have the right for a period of one year to resume the payment of delay rental or commence operations for another well. Upon the resumption of payment of rentals the provisions hereof governing such payment and the effect thereof shall continue in force as though they had not been interrupted.

5. All moneys coming due hereunder shall be paid or tendered to Treeline Corporation direct, or by check payable to his (or her) order mailed to Box 18 Reynolds Ave., Elkview, WV 25071 and no default shall be declared against the Lessee by the Lessor for failure of the Lessee to make any payment or perform any conditions provided for herein unless the Lessee shall refuse or neglect to pay or perform the same for ten days after having received written notice by registered mail from the Lessor of his intention to declare such default.

6. Lessor reserves 200,000 cubic feet of gas per annum for domestic use, to be taken through his own appliances at any producing gas well, and agrees to pay Lessee a fair domestic rate for any gas used in excess thereof. Lessor further covenants and agrees that his taking and use of gas shall be wholly at his own risk, the Lessee not to be held liable for any accident or damage caused thereby, nor shall Lessee be liable for any shortage or failure in the supply of gas for said domestic use.

~~7. Lessee shall have the right to use any formation underlying the leased premises for the storage of gas and shall have all rights and rights-of-way necessary to store and produce such stored gas. As full payment for such storage rights, the Lessee shall pay to the Lessor a rental at the rate of .... per acre per year, while the premises are so used, and so long as the storage payment is made, all provisions of this lease shall remain in full effect.~~

~~8. Lessor further grants to the Lessee, his heirs and assigns, the right to unitize this lease with other leases to form a drilling unit or units of any size up to .... acres for development of the area. In the event this lease is so unitized, the Lessor agrees to accept, in lieu of the royalty hereinbefore recited, such proportion of the royalty above provided, as the acreage covered by this lease bears to the total acreage comprising the unit.~~

9. If said Lessor owns a less interest in the above described land than the undivided fee simple estate therein, then the royalties and rentals herein provided shall be paid the Lessor only in the proportion which his interest bears to the whole and undivided fee.

10. No well may be drilled nearer than 200 feet to the house or barn now on said premises without the written consent of Lessor. Lessee shall have and enjoy all rights and privileges necessary and convenient for the proper use and development of this lease, and shall have the right to use, free of cost, gas, oil and water produced on said land for its operations thereon, except water from wells of Lessor. Lessee shall also have the right at any time to remove all or any part of the machinery, fixtures or structures placed on said premises, including the right to draw and remove casing. Lessee shall pay for damages caused by its operations to growing crops on said lands, and, when requested by Lessor, shall bury its pipe lines below plow depth.

11. The interest or estate of either party hereto may be assigned, the privilege of assigning in whole or in part being expressly allowed. In event this lease shall be assigned as to any part or parts of the above described land and the assignee or assignees of such part or parts shall fail or make default in the payment of the proportionate part of the rents due from him or them, such default shall not operate to defeat or affect this lease insofar as it covers a part or parts of said land upon which the said Lessee or any assignee thereof shall make due payment of said rental. No change of ownership in the land or in the rentals or royalties shall be binding on the Lessee until after notice to the Lessee and it has been furnished with a written transfer or assignment or a certified copy thereof.

12. At any time, Lessee, its successors or assigns, shall have the right to surrender this lease or any part thereof for cancelation, after which all payments and liabilities hereunder thereafter shall cease and determine, and if the whole is surrendered, then this lease shall become absolutely null and void. This surrender may be made to the Lessor, or if more than one Lessor, then to any one of them, or to the heirs or assigns of any one of them by delivery of a duly executed surrender thereof in person or by mail addressed to the post office address of such person, or by recording a duly executed surrender thereof in the Recorder's office of the County in which the land is located.

13. Lessor hereby ~~warrants and agrees to defend the title to the land herein described and~~ agrees that the Lessee at its option may pay, discharge or redeem any taxes, mortgages, or other liens existing, levied, or assessed on or against the above described lands, and in event it exercises such option, it shall be subrogated to the rights of any holder or holders thereof and may reimburse itself by applying any royalty or rentals accruing hereunder to the discharge of any such taxes, mortgages or other liens.

14. It is expressly agreed that if the Lessee shall commence drilling operations at any time while this lease is in force, it shall remain in force and its terms continue so long as such operations are prosecuted, and if production results therefrom, then as long as production continues. If after the expiration of the term of this lease production from the leased premises shall cease from any cause, this lease shall not terminate provided Lessee resumes operations within sixty days from such cessation, and this lease shall remain in force during the prosecution of such operations, and, if production results therefrom, then as long as oil or gas is produced in paying quantities.

Please return to: D. C. Malcolm, Inc.
1006 Commerce Square
Charleston, WV 25301

STATE OF WEST VIRGINIA,

COUNTY OF KANAWHA, To-Wit:

I, Roberta L. Bird, a Notary Public of said County, do hereby certify that ROBERT L. JACKSON, PRESIDENT of TREELINE CORPORATION has this day acknowledged the same before me in my said County. Given under my hand this 22nd day of February, 1984.

Roberta L. Bird
Notary Public

My Commission expires Oct. 21, 1984.

This instrument was prepared by: D. C. Malcolm, Inc., 1006 Commerce Square, Charleston, West Virginia, 25301.

Please return to: D. C. Malcolm, Inc.
1006 Commerce Square
Charleston, WV 25301

EXTENSION OF LEASE

THIS AGREEMENT, made this 11th day of February, 1984, between TREELINE CORPORATION, as party of the first part, and D. C. MALCOLM, INC. as party of the second part;

WITNESSETH: WHEREAS, the party of the second part is the present owner of that certain leasehold estate for oil and gas purposes, having fully complied with the several terms and provisions thereof, executed by Robert L. Jackson, President of Treeline Corporation, bearing date the 14th day of December, 1983, and recorded in the office of the Clerk of the County Court of Kanawha County, West Virginia, in Book 222, at page 47, upon a tract of twenty-one (21) acres, more or less of land, in Big Sandy District of said County, bounded substantially as follows:

On the North by the lands of Orville Hackney Estate
On the East by the lands of J. E. White
On the South by the lands of Route 119
On the West by the lands of Seafler

WHEREAS, the party of the first part is the present owner of all of the land embraced in said lease, and all of the rentals and royalties accruing thereunder, and have agreed with the party of the second part upon an extension of the term of said lease;

NOW THEREFORE, in consideration of the premises, and the sum of One Dollar ($1.00), the receipt whereof is hereby acknowledged, the said party of the first part does further grant and demise the said tract of land to the party of the second part, its successors and assigns, for the purposes of said original lease, for and during an additional term of thirty (30) days from and after the 11th day of February, 1984, and so long after the expiration of said additional term as the said land is operated by the Lessee in the search for or production of oil or gas.

TO HAVE AND TO HOLD unto the said party of the second part during said additional period of time upon the same terms, rentals and royalties as are set forth in said original lease; it being the intention hereof that the said lease shall be of the same character, force and effect as if it had been originally granted for the additional term of thirty days, and as long thereafter as the said land is operated by the Lessee in the search for or production of oil or gas, instead of for the term originally specified therein.

WITNESS the following signatures and seals:

WITNESS:

Robert L. Jackson, President
TREELINE CORPORATION

02/16/2024